# iNSTA DISPLAYS

Unique Display Solutions-
Portable & Toolless & Cordless
Inspiring Brands To Life

instaDisplays

INSTA DISPLAYS


| | |
|---|---|
| InstaLed | P3—P4 |
| Big InstaLed | P5—P6 |
| Battery Power Base InstaLed | P7—P8 |
| Slim Battery Power InstaLed | P9—P10 |
| White Dynamic Light Box | P11—P12 |
| RGB Dynamic Light Box | P13—P14 |
| Counter -InstaLed | P15—P16 |
| Premium Counter | P17—P18 |
| SEG Pop Up Counter | P19—P20 |
| SEG Pop Up Edgelit Light Box | P21—P22 |
| Wallmounted Light Box | P23—P24 |
| Insta-Led Bars | P25—P26 |
| InstaCube & InstaCase | P27—P28 |
| InstaBooth & Notes | P29—P30 |




Cone Lens
Patent:
China: ZL2014 3 0556188.9
EUIPO: 003034008-0001
Australia: 201615892

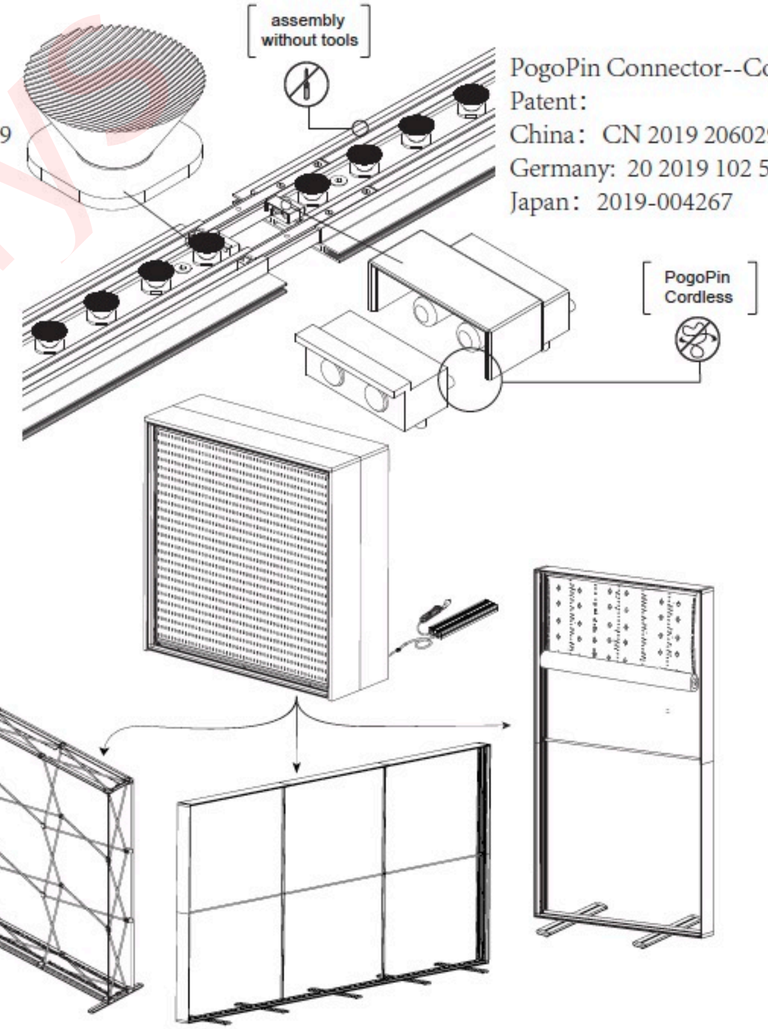


PogoPin Connector--Cordless
Patent:
China: CN 2019 20602991.9
Germany: 20 2019 102 570
Japan: 2019-004267

InstaDisplays

# InstaLed

## Toolless & Cordless Led Light Box

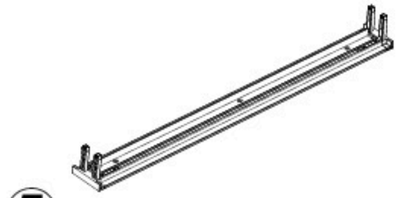

5 Horizontal Profile Bottom

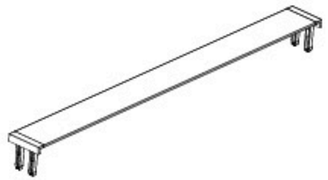

1 Horizontal Profile Top

6 Free Stand Foot

2 Vertical Profile Up

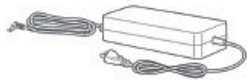

7 Power Adapter Kit

3 Vertical Profile Down

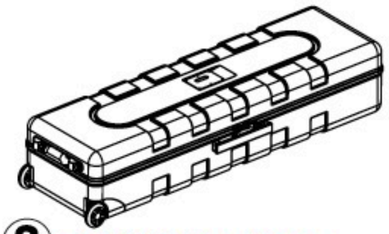

8 ABS Trolley Case

4 Middle Pole

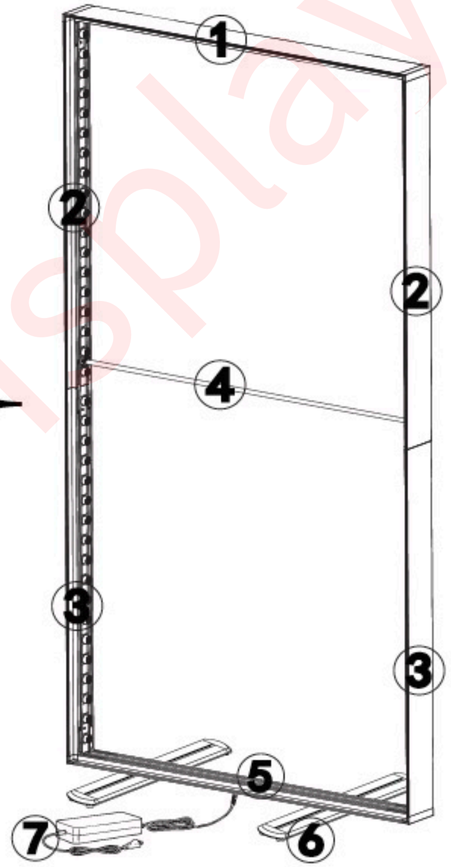


Size:1000mm (W)-2000mm (H)

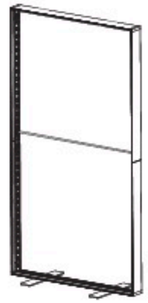

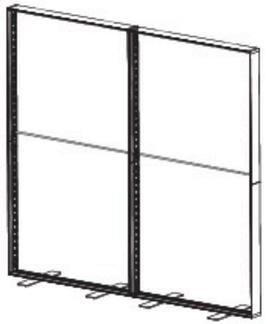

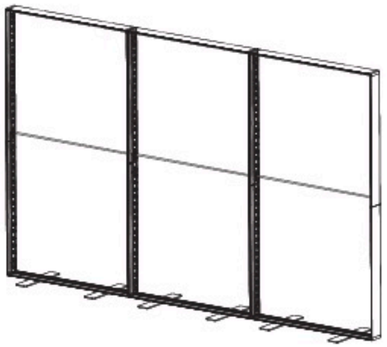

instaDisplays

# Big InstaLed

## Toolless & Cordless Led Light Box

7 Vertical Profile-Left

8 Vertical Profile-Right

9 Middle Support Poles

10 Free Stand Foot

11 Power Adapter Kit

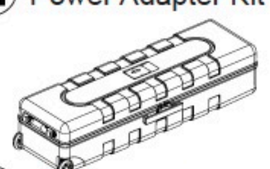

12 ABS Trolley Case

1 Horizontal Profile Top

2 Horizontal Profile Top Middle

3 Horizontal Profile Top

4 Horizontal Profile Bottom

5 Horizontal Profile Bottom Middle

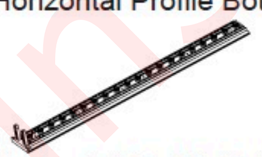

6 Horizontal Profile Bottom

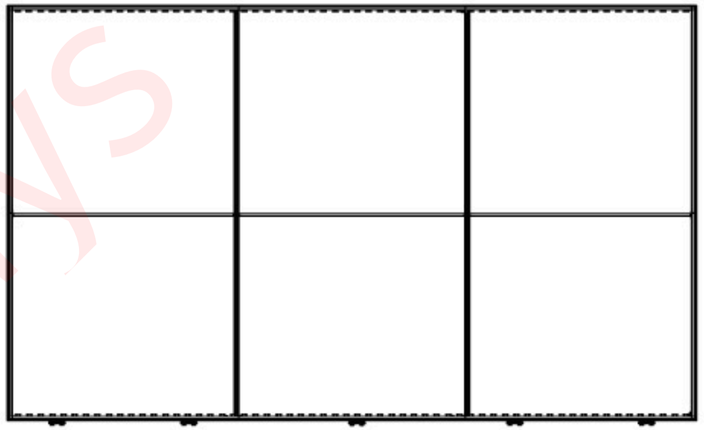

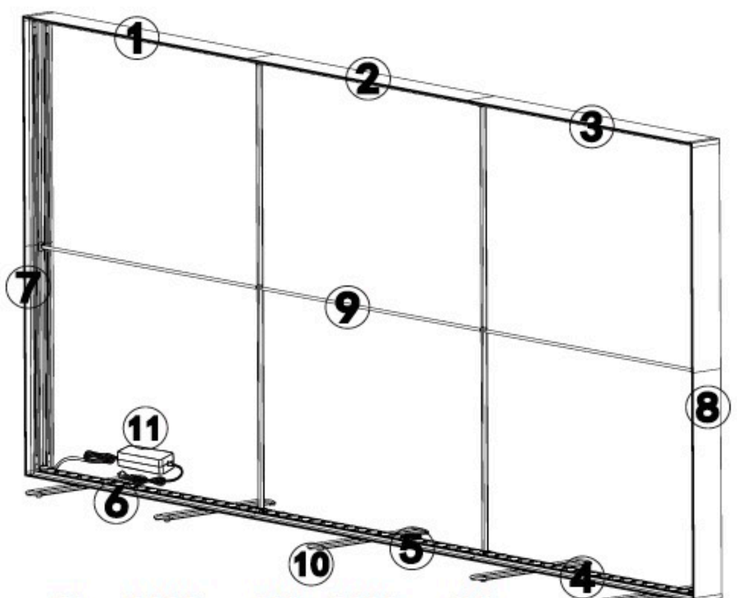


Size: 3000mm(W) - 2000mm(H)

instaDisplays

# InstaLed

## Toolless & Cordless
## Battery Power Base
## Lighting 11 Hours

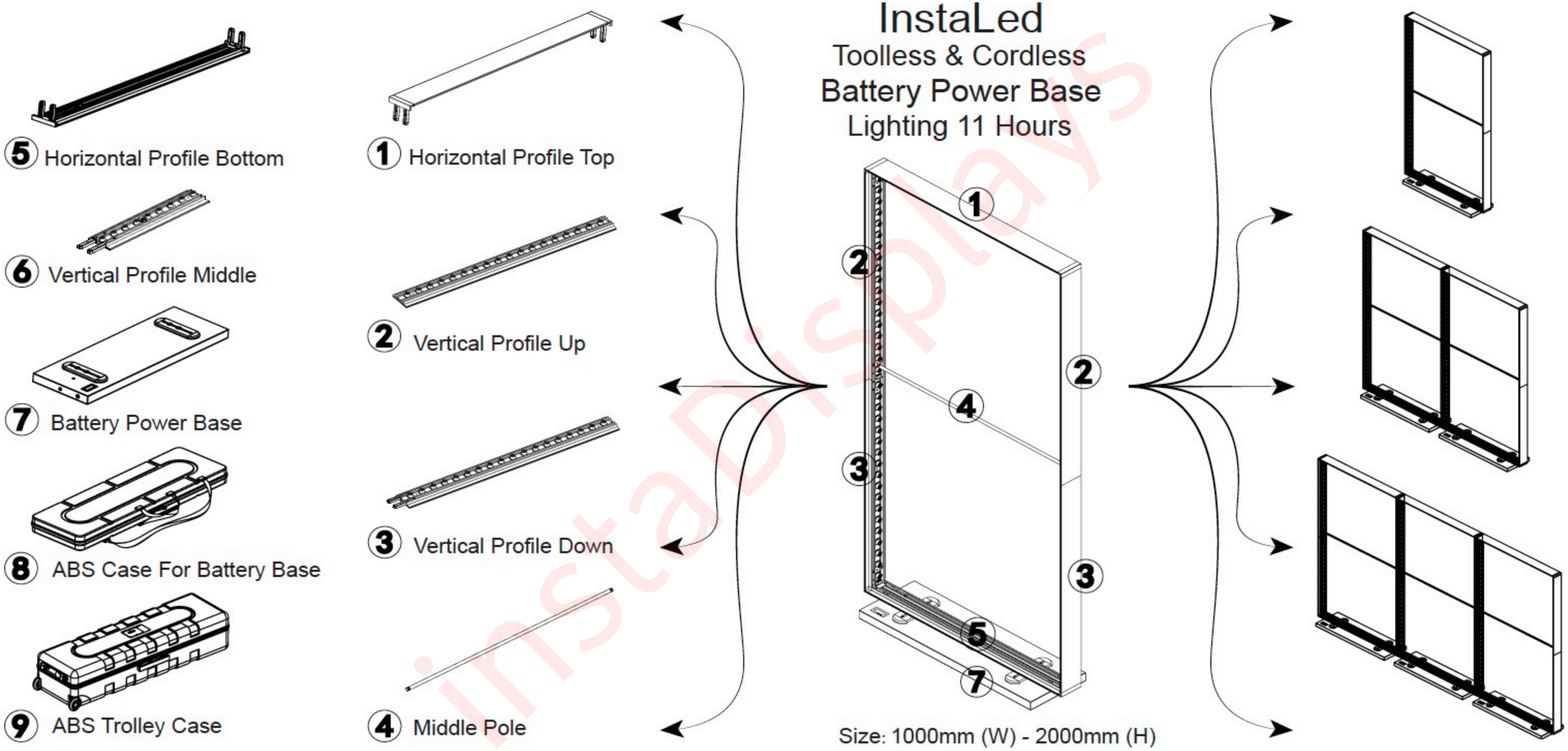


instaDisplays

# InstaLed

Toolless & Cordless
Slim Battery Power Box
Lighting 11 Hours

5 Horizontal Profile Bottom

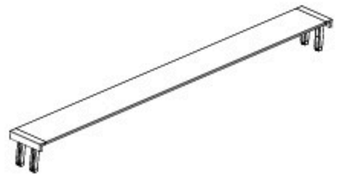

1 Horizontal Profile Top

6 Free Stand Foot

2 Vertical Profile Up

7 Slim Battery Power Box

3 Vertical Profile Down

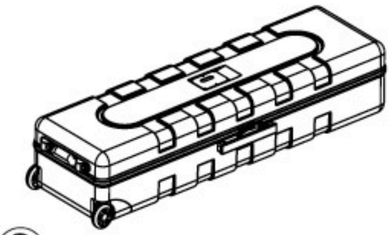

8 ABS Trolley Case

4 Middle Pole

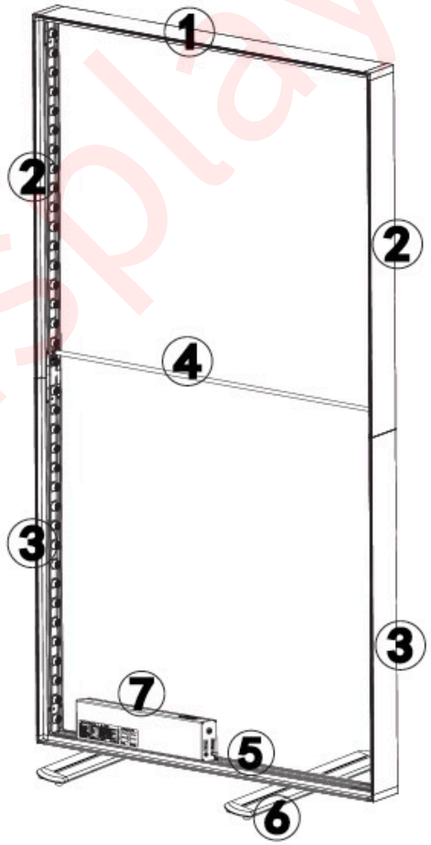


Size: 1000mm (W) - 2000mm (H)

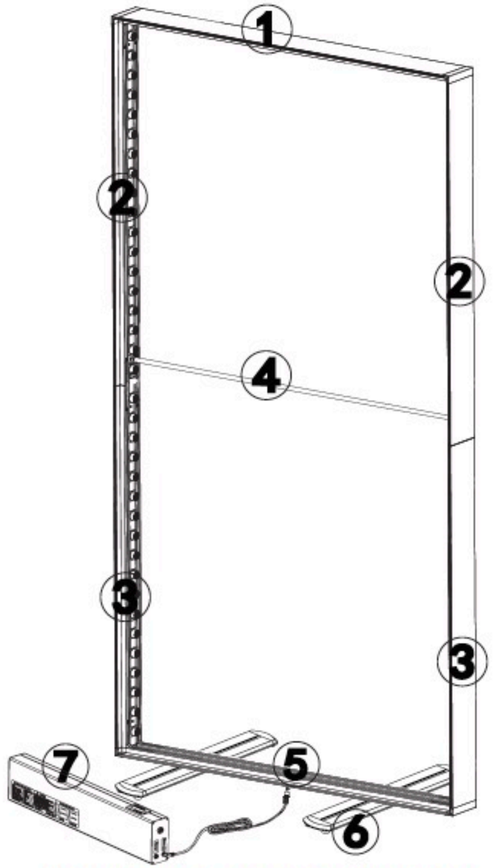


Size:1000mm (W)-2000mm (H)

instaDisplays

# White Dynamic Light Box

## Toolles & Cordless

## Rollable Led Curtain

6 Vertical Profile Middle

7 Rollable Dynamic Led Curtain

8 Power Box For Dynamic

9 ABS Packing Tube

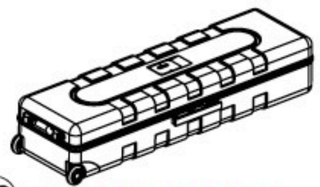

10 ABS Trolley Case

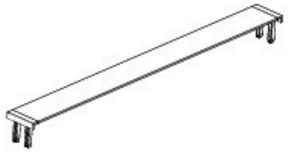

1 Horizontal Profile Top

2 Vertical Profile Up

3 Vertical Profile Down

4 Middle Pole

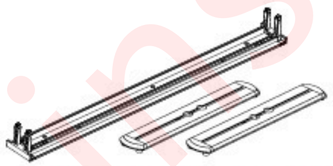

5 Horizontal Profile Bottom

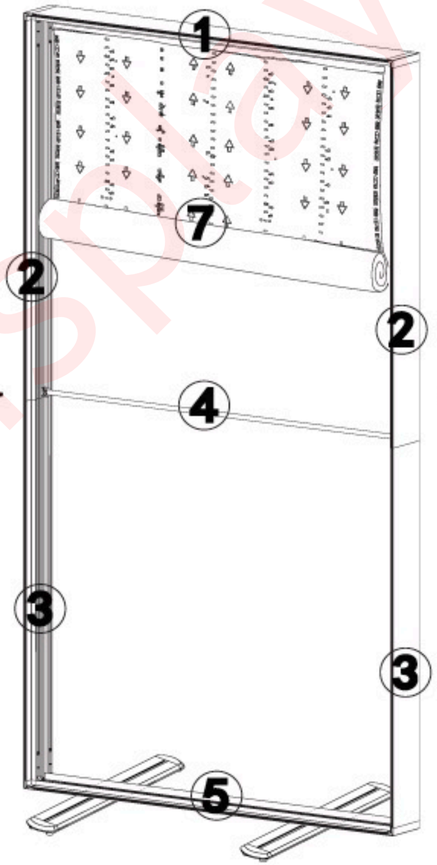


Size:1000mm (W) - 2000mm (H)

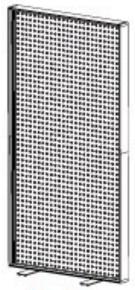

1x2m

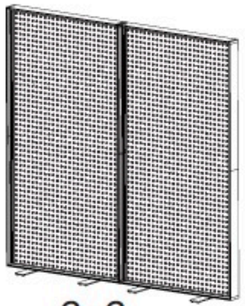

2x2m

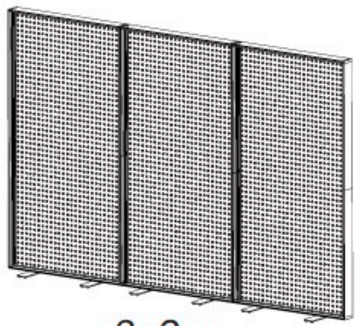

3x2m

instaDisplays

# RGB Dynamic Light Box

## Toolles & Cordless

## Rollable Led Curtain

6 Vertical Profile Middle

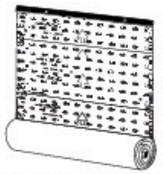

7 Rollable Dynamic Led Curtain

8 Power Box For Dynamic

9 ABS Packing Tube

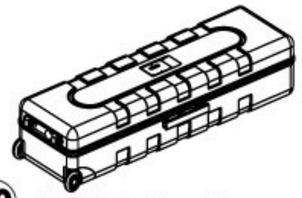

10 ABS Trolley Case

1 Horizontal Profile Top

2 Vertical Profile Up

3 Vertical Profile Down

4 Middle Pole

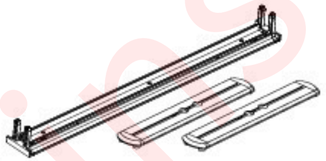

5 Horizontal Profile Bottom

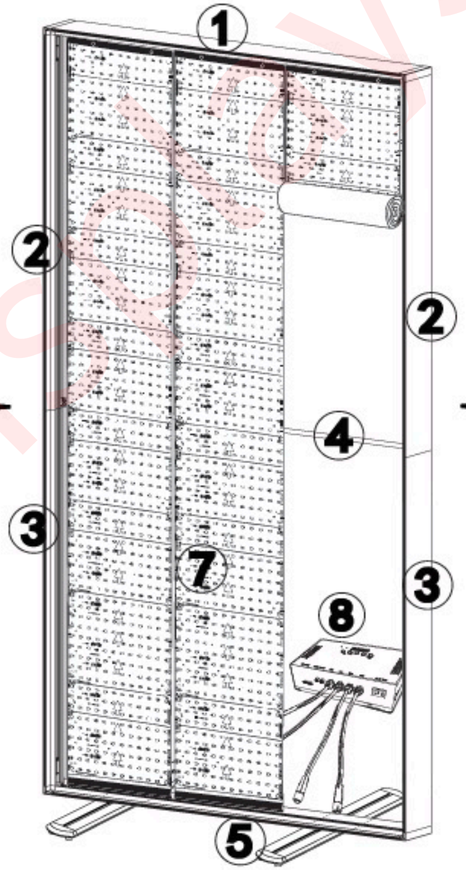


Size:1000mm (W) - 2000mm (H)

Cylinder Dynamic

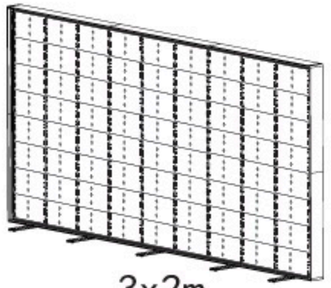

3x2m

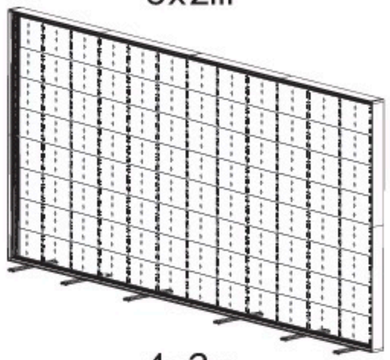

4x2m

instaDisplays

# Counter---InstaLed
# Toolless & Cordless

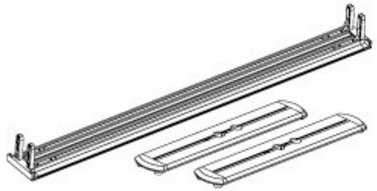

4 Horizontal Profile Bottom

1 Top Board

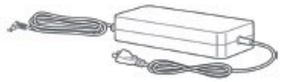

5 Power Adapter Kit

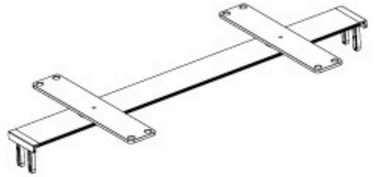

2 Horizontal Profile Top

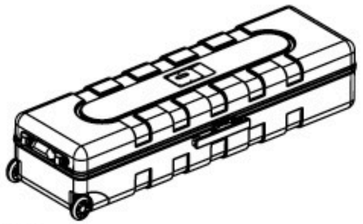

6 ABS Trolley Case

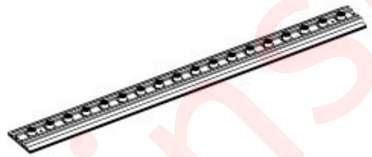

3 Vertical Profile

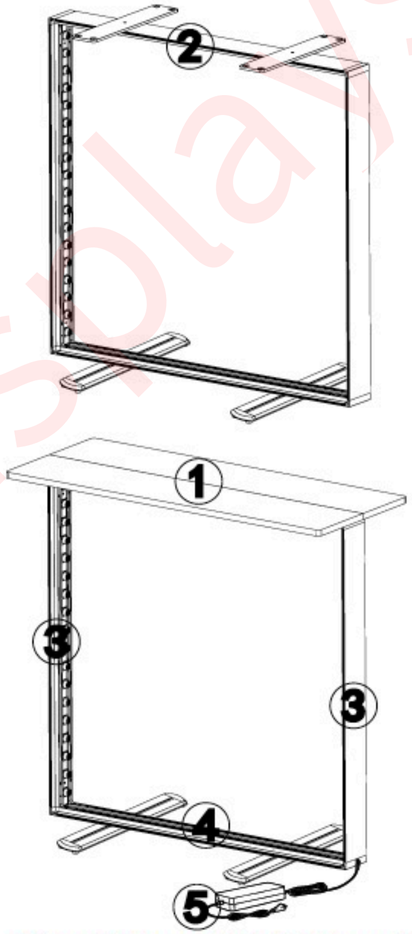


Size:1000mm (W)- 1040mm (H)

1x1

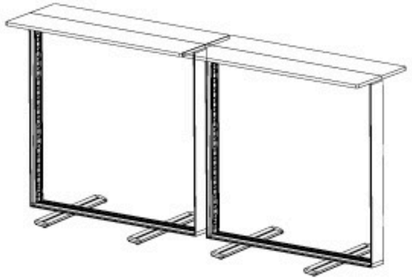

2x1

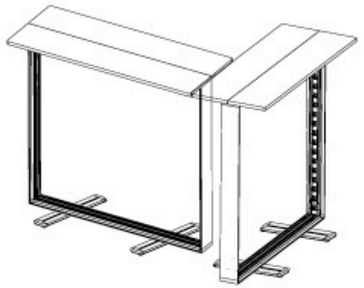

instaDisplays

# Premium Counter
# Edgelit Led Lighting
# Rollable Dynamic Led Curtain

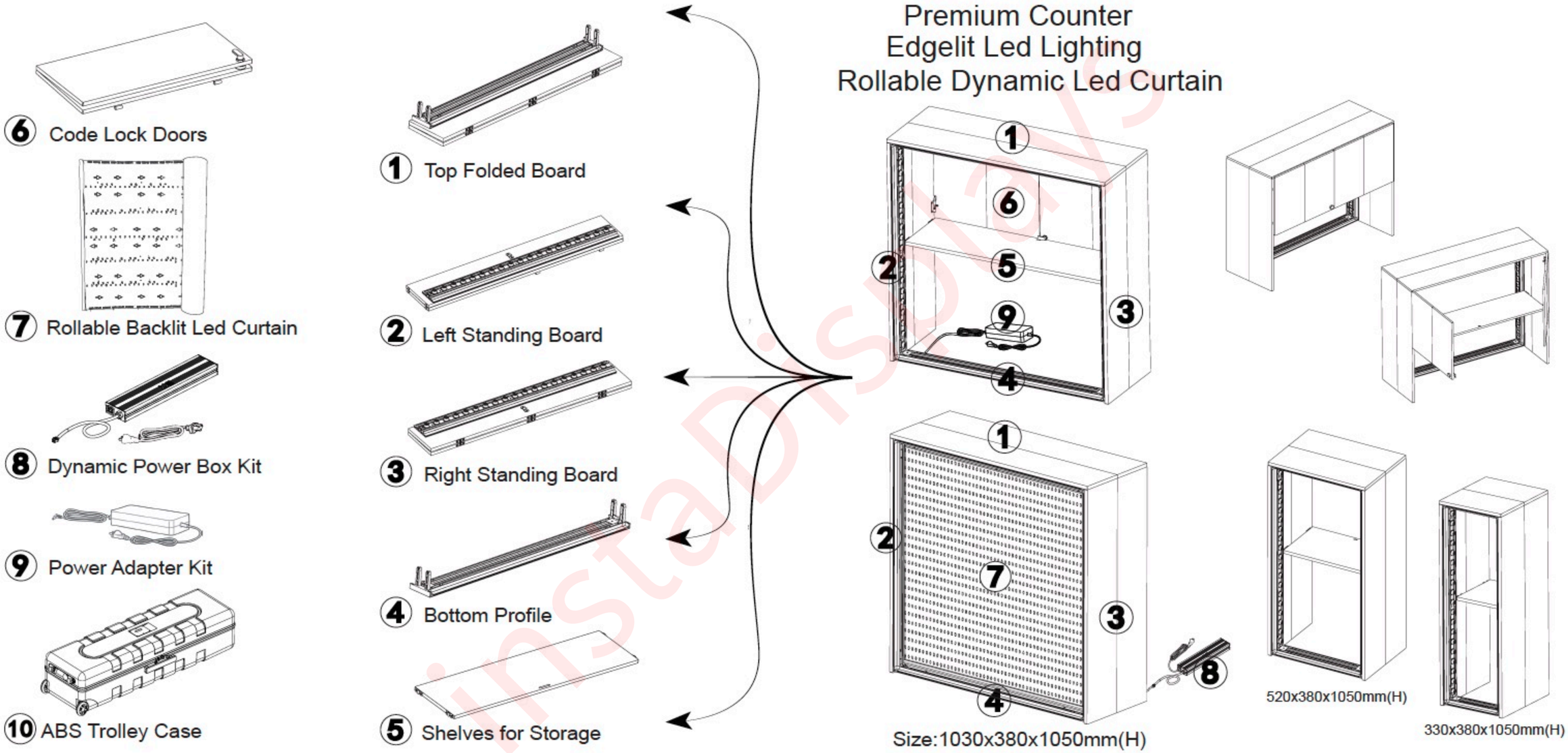


instaDisplays

# Counter---SEG Pop Up Magnetic Frame Design

5 SEG Pop Up Frame Kit

6 Power Adapter Kit

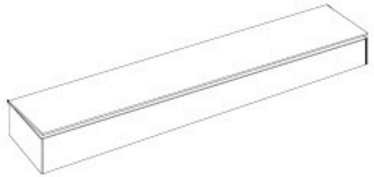

7 Paper Box Packing Inside

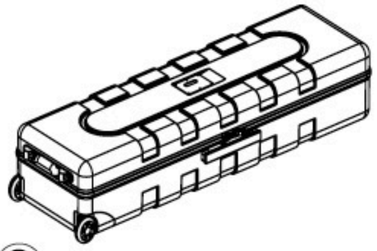

8 ABS Trolley Case

1 Top Board

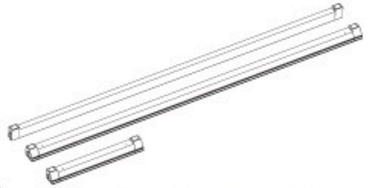

2 Magnetic Channel Bars

3 Edgelit Led Bars

4 DC Cable For Connecting

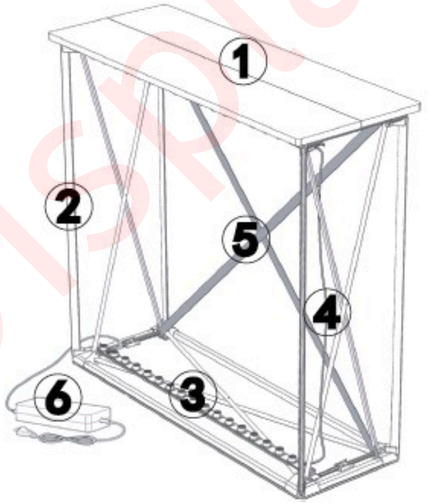


Size:1060mm (W)- 1020mm (H)

1x1

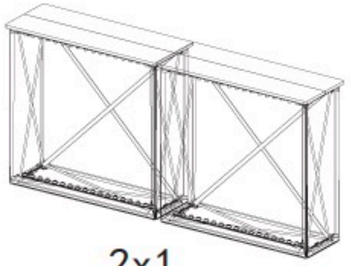

2x1

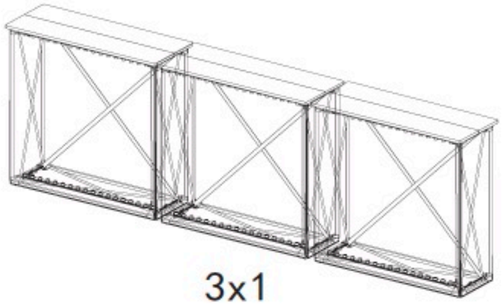

3x1

instaDisplays

# SEG Pop Up
# Edgelit Light Box
## Magnetic Frame Design

5 DC Cable For Connecting

1 SEG Pop Up Frame Kit

2 Magnetic Channel Bars

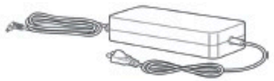

6 Power Adapter Kit

3 Edgelit Led Bars

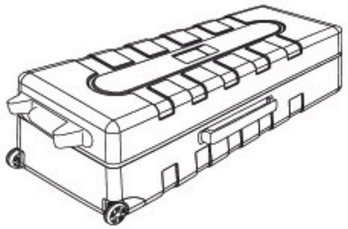

7 ABS Trolley Case

4 Free Stand Foot

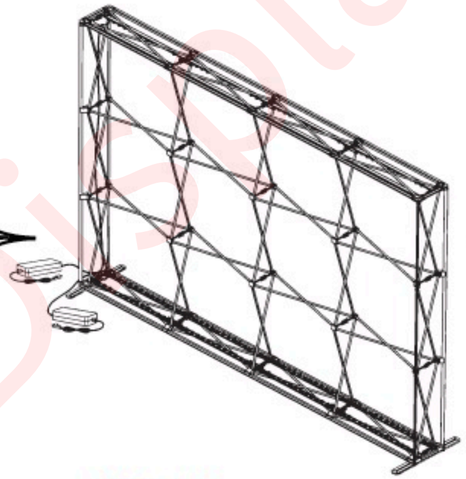

SEG 4x3
Size:2985mm (W) - 2211mm (H)

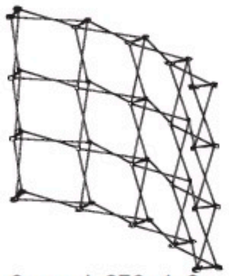

Curved SEG 4x3

2x1

1x3

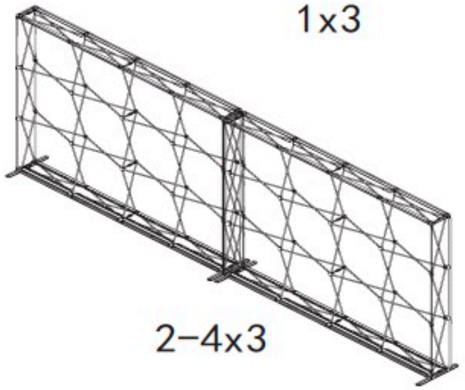

2−4x3

instaDisplays

# Wallmounted
## Backlit Led Light Box
## Rollable Led Curtain

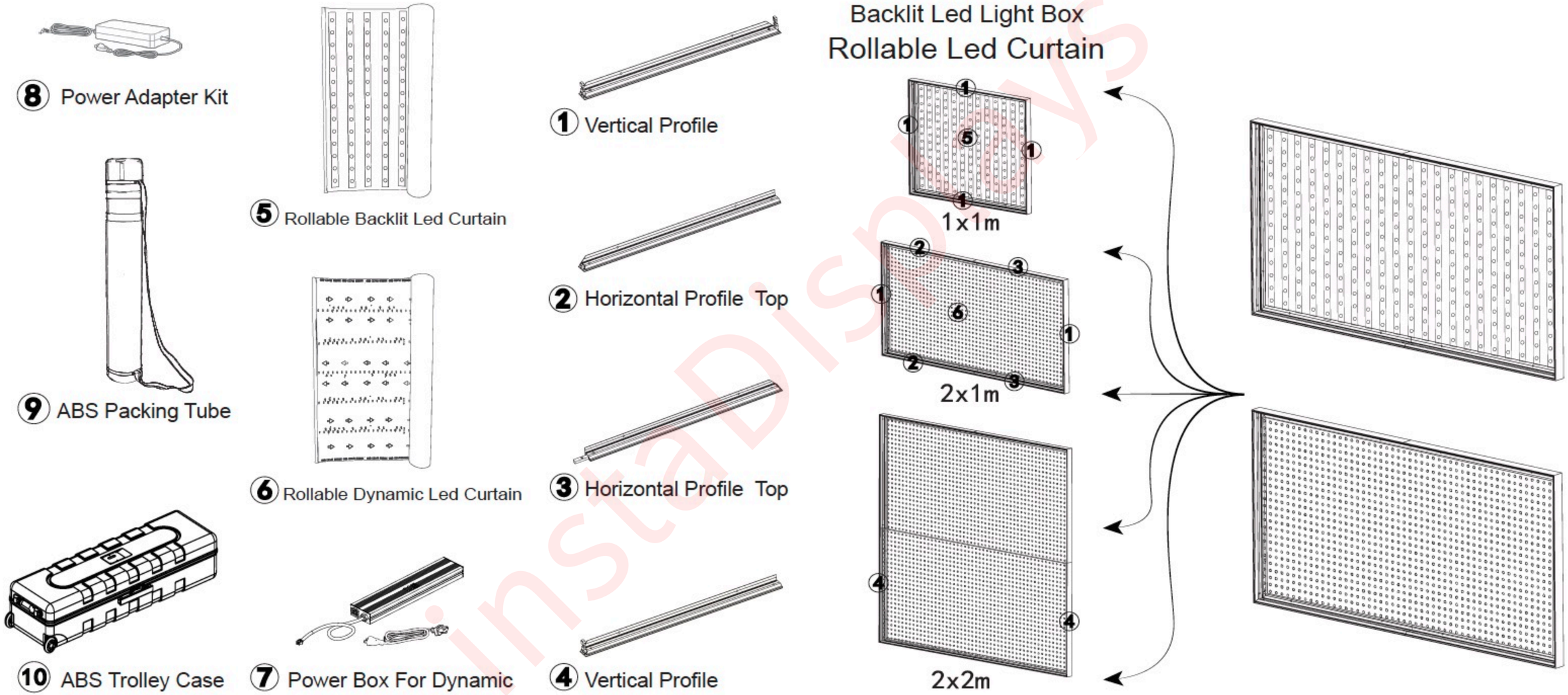


instaDisplays

# Edgelit Led Bars

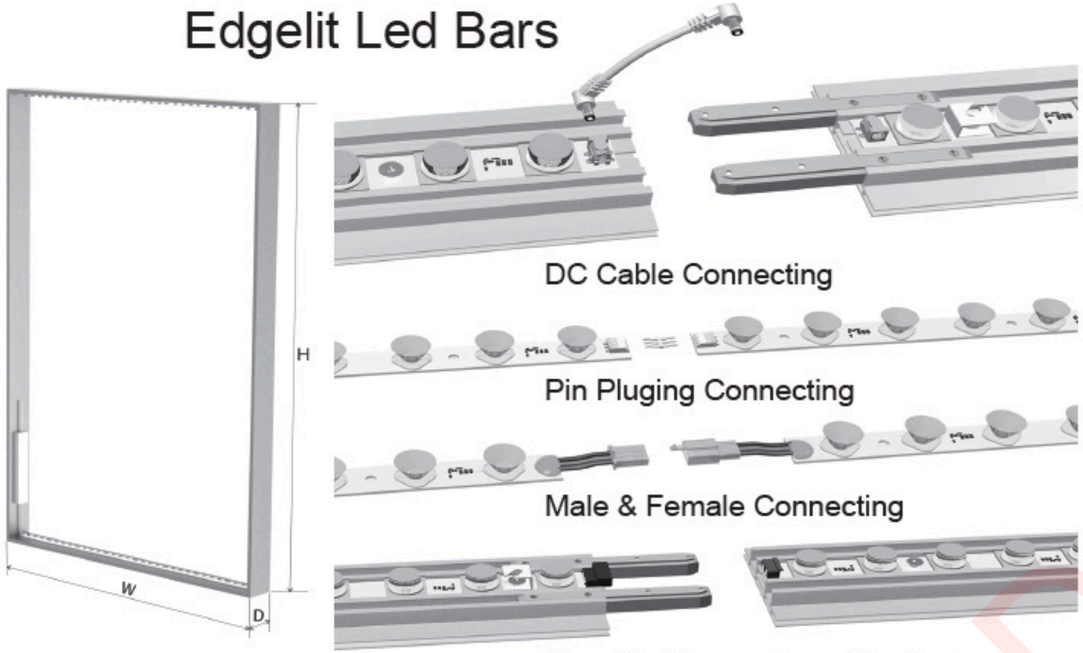


## ST-SL-2W-Cone

White-6500K or RGB--Both Same Lighting Function

### Double Side Light Box

Lighting Distance as 3000mm

| Depth (mm) | Size of Light Box (mm) | LED Bar | Power (W) | Led Bar Set |
|---|---|---|---|---|
| D:120 mm | W:2000mm-H:3000 mm | ST-SL3010-480C2:8pcs | 160W | 2000 mm |
| | | | | Only Top and Bottom |

### Both Sides With White Fabric

| Fabric | Away from edge:30 cm Brightness (lux) | Away from edge:100 cm Brightness (lux) | Away from edge:150 cm Brightness (lux) |
|---|---|---|---|
| white | 1900（lux） | 1600（lux） | 1667（lux） |



# ORIGINAL CONE LENS INVENTOR

PATENT OWNER IN CHINA, EUROPE, AUSTRALIA,USA

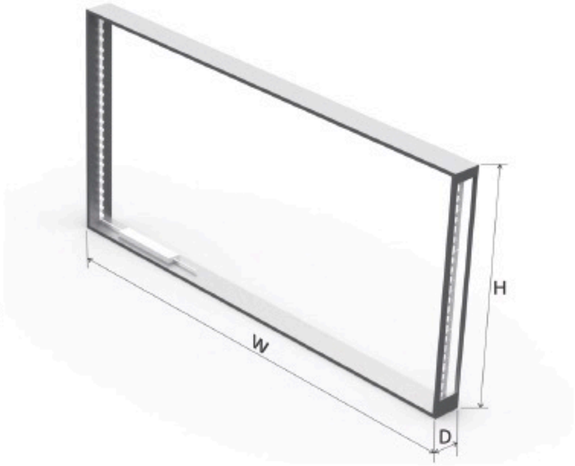


## ST-SL-3W-Cone

Lighting Distance as 5000mm

### Double Side Light Box

| Depth (mm) | Size of Light Box (mm) | LED Bar | Power (W) | Led Bar Set |
|---|---|---|---|---|
| D:150 mm | W:5000mm-H:2500 mm | ST-SL3010-480C3:10 pcs | 300 W | 2500 mm |
| | | | | Only Left and Right |

### Both Sides With White Fabric

| Fabric | Away from edge:30 cm Brightness (lux) | Away from edge:90 cm Brightness (lux) | Away from edge:150 cm Brightness (lux) | Away from edge:250 cm Brightness (lux) |
|---|---|---|---|---|
| white | 2465（lux） | 2680（lux） | 2180（lux） | 2048（lux） |



instaDisplays

# InstaCube

## Toolless & Cordless

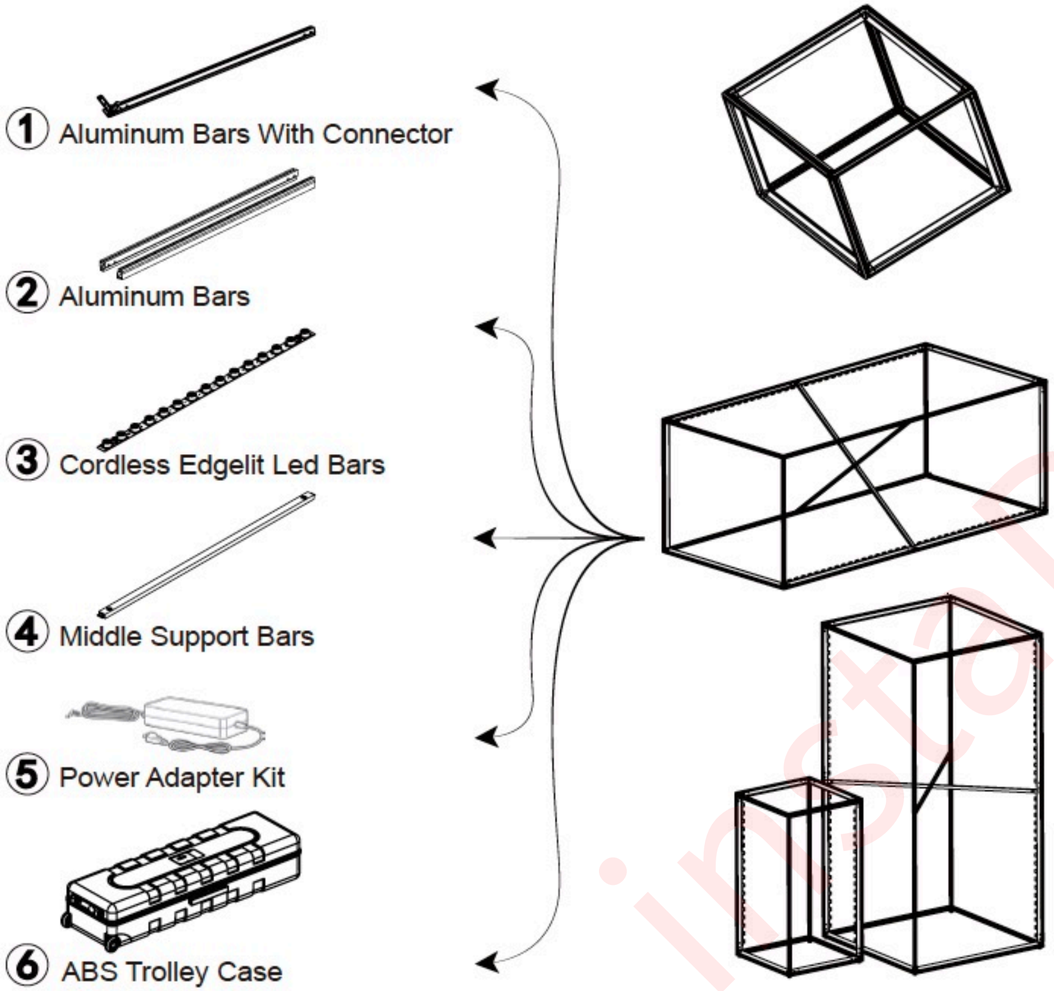




# InstaCase

## Handy ABS Hard Shell Case

Strong Protection For Lightbox Kit Inside, Easy To Transport Via Castors And Handles!

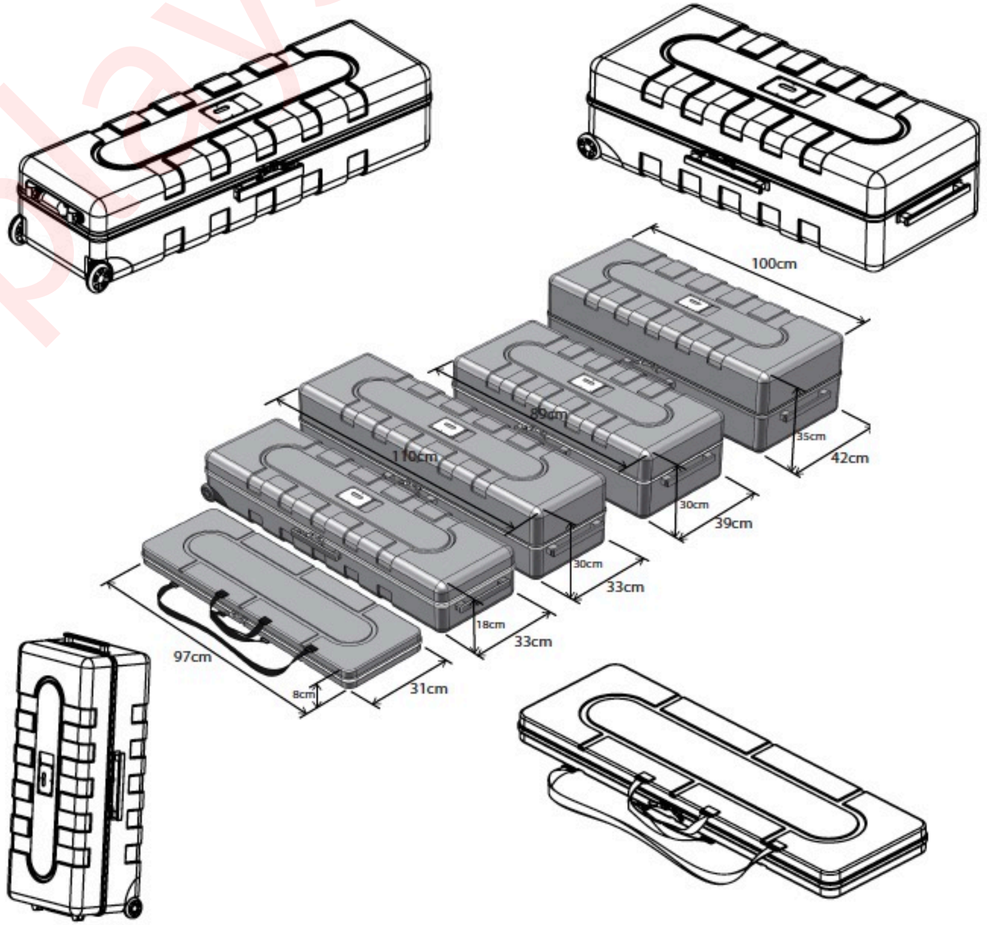




instaDisplays

# InstaBooth

## Toolless & Portable
## Building Your Booth

InstaDisplays



# Notes